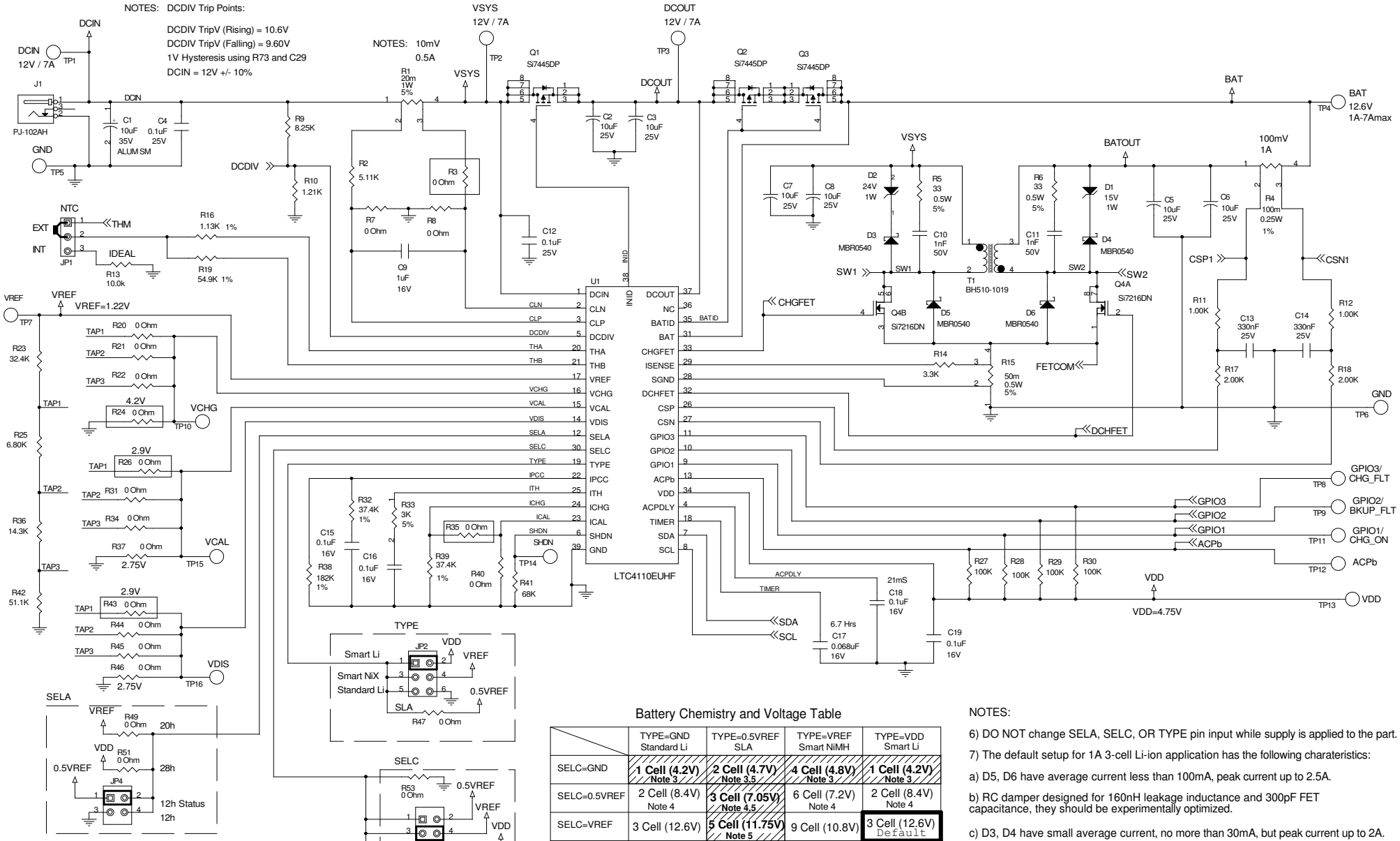

SELA Table.

	GPIO MODE	SMBus Addr	Smart Batt OK?
SELA = VDD	GPIO	28hx	NO
SELA = VREF	GPIO	20hx	NO
SELA = 0.5VREF	STATUS	12hx	YES
SELA = GND	GPIO	12hx	YES

Note: DemoSoftware will ask about SELA jumper setting on startup.

Battery Chemistry and Voltage Table

	TYPE=GND Standard Li	TYPE=0.5VREF SLA	TYPE=VREF Smart NiMH	TYPE=VDD Smart Li
SELC=GND	**1 Cell (4.2V)** Note 3	**2 Cell (4.7V)** Note 3,5	**4 Cell (4.8V)** Note 3	**1 Cell (4.2V)** Note 3
SELC=0.5VREF	2 Cell (8.4V) Note 4	**3 Cell (7.05V)** Note 4,5	6 Cell (7.2V) Note 4	2 Cell (8.4V) Note 4
SELC=VREF	3 Cell (12.6V)	**5 Cell (11.75V)** Note 5	9 Cell (10.8V)	3 Cell (12.6V) Default
SELC=VDD	4 Cell (16.8V)	**6 Cell (14.1V)** Note 5	10 Cell (12V)	4 Cell (16.8V)

NOTES:

1) With VCHG=GND, termination voltages are Li=4.2V/Cell & SLA=2.35V/Cell.

2) NiMH voltages are rated voltages using 1.2V/Cell.

3) Requires transformer changed to: 3:1 ratio Pri/Sec

4) Better performance with transformer changed to: 2:1 ratio Pri/Sec

5) Requires modifcation of Thermistor Circuit to work.

NOTES:

6) DO NOT change SELA, SELC, OR TYPE pin input while supply is applied to the part.

7) The default setup for 1A 3-cell Li-ion application has the following charateristics:

a) D5, D6 have average current less than 100mA, peak current up to 2.5A.

b) RC damper designed for 160nH leakage inductance and 300pF FET capacitance, they should be experimentally optimized.

c) D3, D4 have small average current, no more than 30mA, but peak current up to 2A.

8) For higher current application use bigger transformer, increase the current and power rating of FETs and diodes if needed, and change the snubber design accordingly. See second page.

9) Zero-Ohm resistors with BOXES around them are stuffed on the PCB board. Any other zero-ohm resistor is not stuffed.

CUSTOMER NOTICE

LINEAR TECHNOLOGY HAS MADE A BEST EFFORT TO DESIGN A CIRCUIT THAT MEETS CUSTOMER-SUPPLIED SPECIFICATIONS; HOWEVER, IT REMAINS THE CUSTOMER'S RESPONSIBILITY TO VERIFY PROPER AND RELIABLE OPERATION IN THE ACTUAL APPLICATION. COMPONENT SUBSTITUTION AND PRINTED CIRCUIT BOARD LAYOUT MAY SIGNIFICANTLY AFFECT CIRCUIT PERFORMANCE OR RELIABILITY. CONTACT LINEAR TECHNOLOGY APPLICATIONS ENGINEERING FOR ASSISTANCE.

THIS CIRCUIT IS PROPRIETARY TO LINEAR TECHNOLOGY AND SUPPLIED FOR USE WITH LINEAR TECHNOLOGY PARTS.

CONTRACT NO.

APPROVALS		DATE
DRAWN	Antonina K	4/12/07
CHECKED		
APPROVED		
ENGINEER	Mark G	4/12/07
DESIGNER		

Thursday, June 26, 2008

LINEAR TECHNOLOGY
1630 McCarthy Blvd.
Milpitas, CA 95035
Phone: (408)432-1900
Fax: (408)434-0507

TITLE
LTC4110EUHF
Battery Backup System Manager

SIZE	CAGE CODE	DWG NO	REV
		DC1259A	2

SCALE: FILENAME: SHEET 1 OF 2

Option Circuits and parts for 2 and 3 Amp Versions

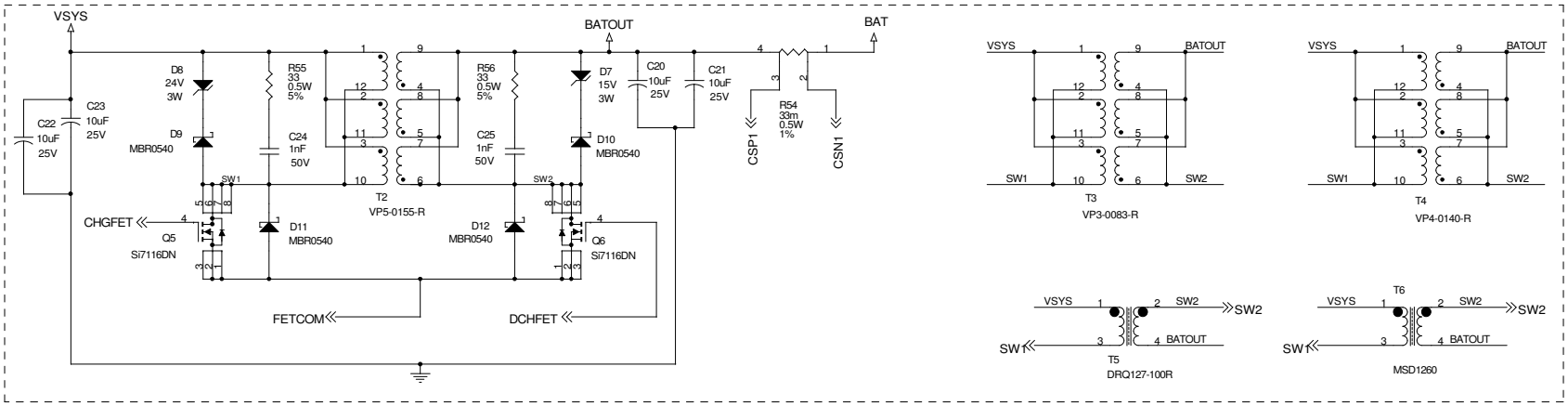

Chatter Removal Option
(See Datasheet)

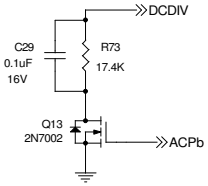

Remove to kill all LED power

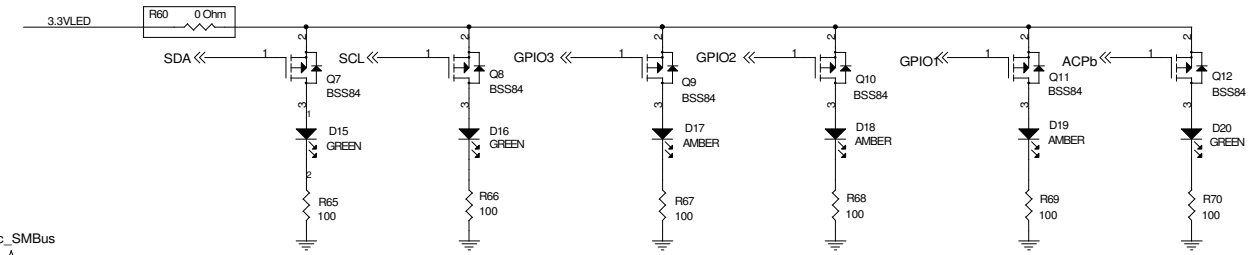

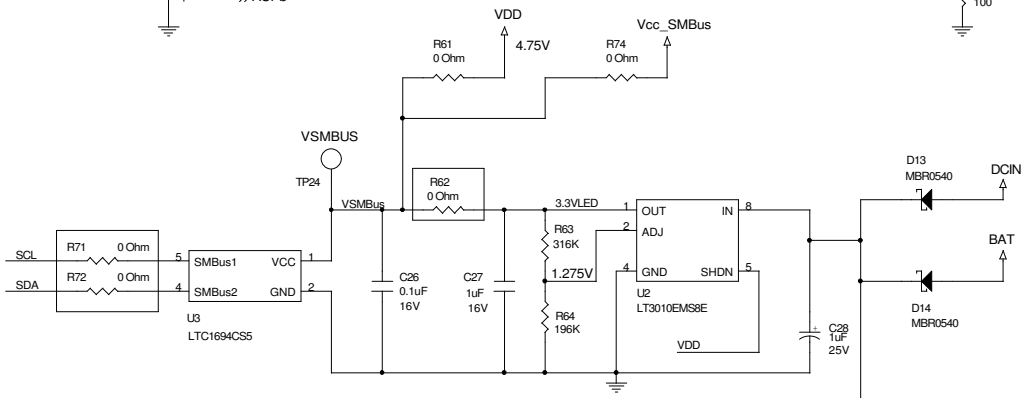

POWER UP GPIO DEFAULTS (UVLO Rising)

JUMPER SETTINGS		OUTPUT STATUS		
SELA Pin	TYPE	GPIO1	GPIO2	GPIO3
0.5VREF	Li or Ni	CHG_ON	BKUP_FLT	CHG_FLT
0.5VREF	SLA	C/5	BKUP_FLT	CHG_FLT
NOT 0.5VREF	Don't Care	High Z	High Z	High Z

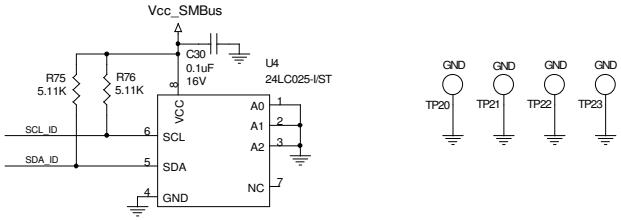

Remove R61 or R62 if external SMBus Power is Used.

Remove R71 and R72 if external SMBus pullups are provided.

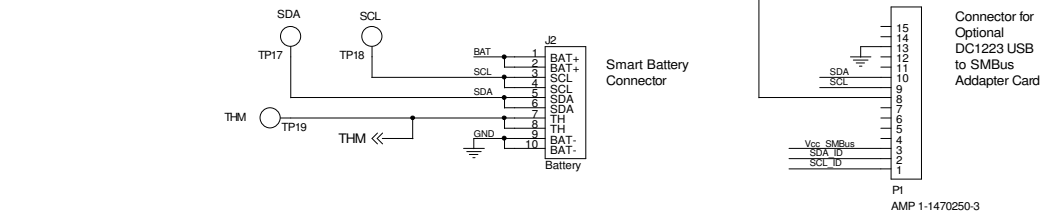

CUSTOMER NOTICE

LINEAR TECHNOLOGY HAS MADE A BEST EFFORT TO DESIGN A CIRCUIT THAT MEETS CUSTOMER-SUPPLIED SPECIFICATIONS; HOWEVER, IT REMAINS THE CUSTOMER'S RESPONSIBILITY TO VERIFY PROPER AND RELIABLE OPERATION IN THE ACTUAL APPLICATION. COMPONENT SUBSTITUTION AND PRINTED CIRCUIT BOARD LAYOUT MAY SIGNIFICANTLY AFFECT CIRCUIT PERFORMANCE OR RELIABILITY. CONTACT LINEAR TECHNOLOGY APPLICATIONS ENGINEERING FOR ASSISTANCE.

THIS CIRCUIT IS PROPRIETARY TO LINEAR TECHNOLOGY AND SUPPLIED FOR USE WITH LINEAR TECHNOLOGY PARTS.

CONTRACT NO.

APPROVALS		DATE
DRAWN	Antonina K	4/12/07
CHECKED		
APPROVED		
ENGINEER	Mark G	4/12/07
DESIGNER		

Thursday, June 26, 2008

LINEAR TECHNOLOGY
1630 McCarthy Blvd.
Milpitas, CA 95035
Phone: (408)432-1900
Fax: (408)434-0507

TITLE
LTC4110EUHF
Battery Backup System Manager

SIZE	CAGE CODE	DWG NO	REV
		DC1259A	2

SCALE: FILENAME: SHEET 2 OF 2